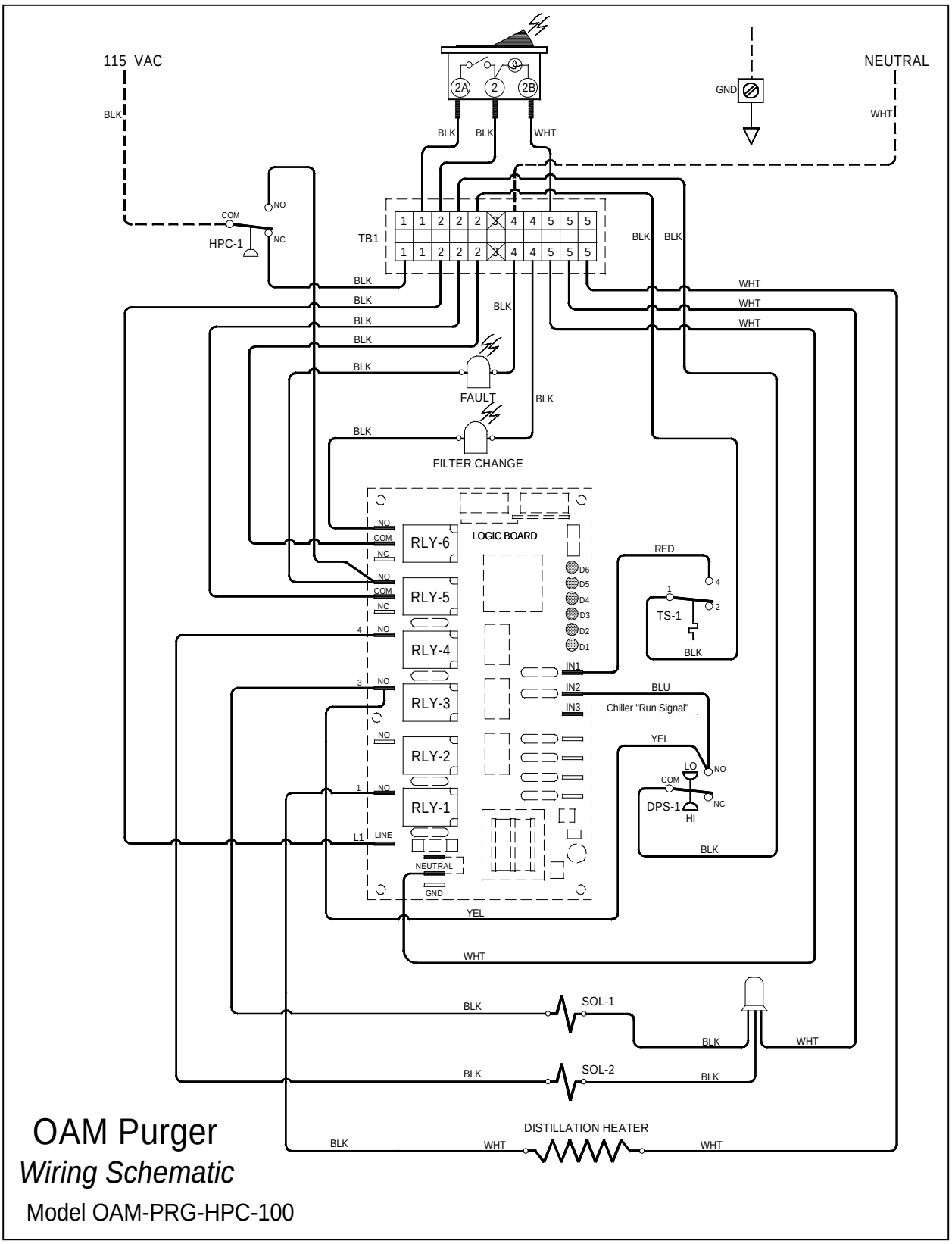

Figure 9. - ***Electrical wiring diagram***